CARBON PRE FILTER OPERATION MANUAL

THANK YOU for purchasing this high-quality product.

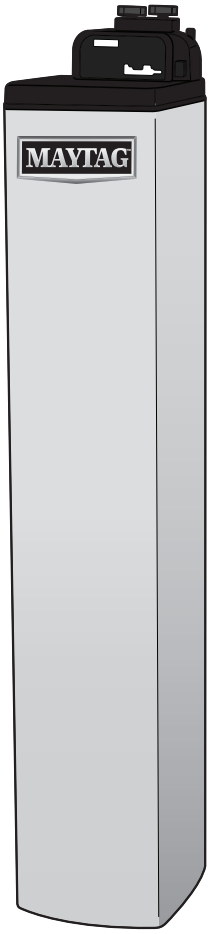

Certified by

International Association of Plumbing and Mechanical Officials (IAPMO) R&T
NSF/ANSI 42, 61 & 372 · IPC

Reference Performance Data Sheet

W11292101A

TABLE OF CONTENTS

CARBON PRE FILTER SAFETY

Your safety and the safety of others are very important.

We have provided many important safety messages in this manual and on your appliance. Always read and obey all safety messages.

This is the safety alert symbol.

This symbol alerts you to potential hazards that can kill or hurt you and others.

All safety messages will follow the safety alert symbol and either the word “DANGER” or “WARNING.” These words mean:

⚠ DANGER — **You can be killed or seriously injured if you don't immediately follow instructions.**

⚠ WARNING — **You can be killed or seriously injured if you don't follow instructions.**

All safety messages will tell you what the potential hazard is, tell you how to reduce the chance of injury, and tell you what can happen if the instructions are not followed.

IMPORTANT: Failure to follow this instruction can result in personal injury or damage to the equipment.

This purpose of this installation manual is to guide the installer through the installation and operation process of MAYTAG™ series water filter.

- Observe all warnings that appear in this manual.
- Inspect the Carbon Pre Filter for carrier shortage or shipping damage before installation.
- It is recommended for all plumbing projects, that a trained professional install the system.
- This filter is to be used for potable water only.

CARBON PRE FILTER LAYOUT

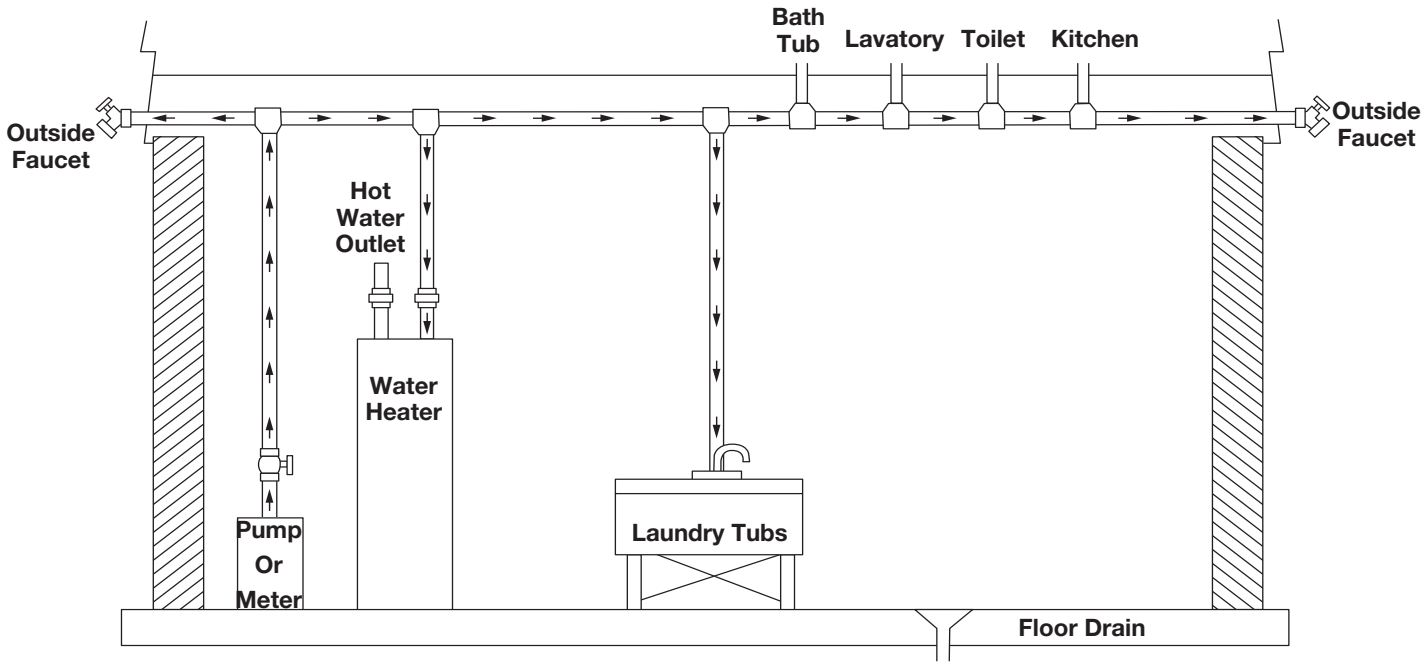

Figure 1: Standard Basement Before Installation (Cold water lines shown)

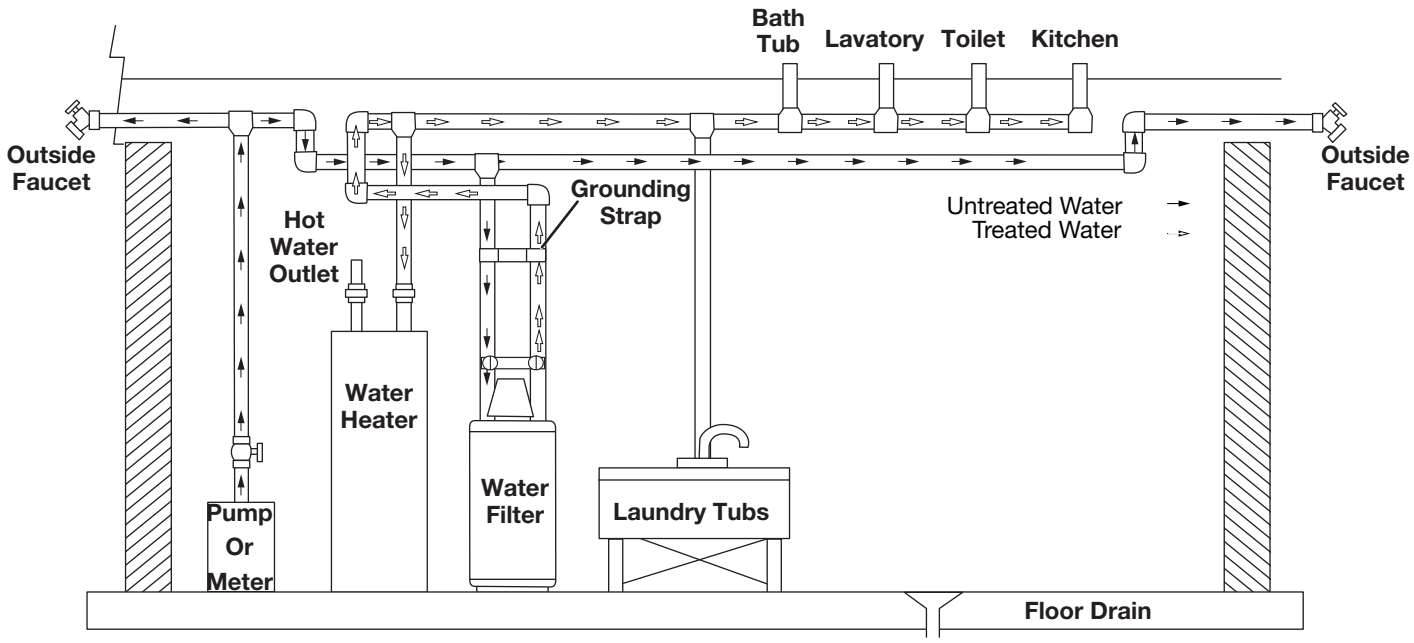

Figure 2: Treated Water Flow Diagram

INSTALLATION OVERVIEW

Bypass Valve

The bypass valve is typically used to isolate the control valve from the water pressure in the plumbing system, in order to perform repairs or maintenance. The bypass valve is particularly unique in the water treatment industry due to its versatility and state of the art design features.

The nuts and caps are glass filled polypropylene. All seals are self-lubricating Ethylene Propylene Eiene Monomer (EPDM) to avoid the valve from seizing if not used for long periods. Internal O-rings are replaceable if service is required.

The bypass valve consists of two interchangeable plug valves that are operated independently by handles. The handles are red arrow-shaped. The handles identify the direction of the water flow. The plug valves enable the bypass valve to operate in four positions:

- **Normal Operation Position:** The inlet and outlet handles point in the direction of water flow, indicated by the engraved arrows on the control valve. Water flows through the control valve during normal operation and this position also allows the control valve to isolate the media bed during the regeneration cycle (Refer to Figure 3).

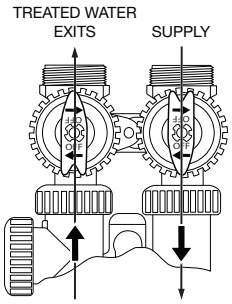

Figure 3: Normal Operation

- **Bypass Operation Position:** The inlet and outlet handles point to the center of the bypass. The control valve is isolated from the water pressure in the plumbing system. Untreated water is supplied to the plumbing system (Refer to Figure 4).

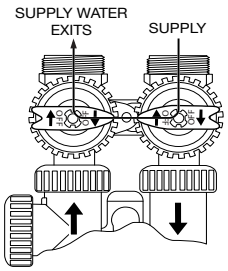

Figure 4: Bypass Operation

- **Diagnostic Operation Position:** When the inlet handle points in the direction of water flow and the outlet handle points to the center of bypass valve, filter water pressure is allowed to the control valve and the plumbing system while not allowing water to exit from the control valve to the plumbing. (Refer to Figure 5).

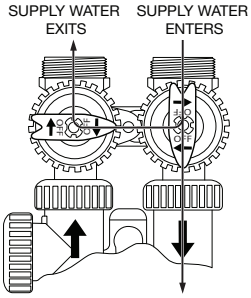

Figure 5: Diagnostic Operation

The diagnostic position allows a service technician to work on a pressurized filter while still providing untreated bypass water to the facility or residence. Its completely non-metallic, all-plastic design allows for easy access and serviceability without the need of tools. Radial seals handle side-to-side and up/down minor plumbing misalignments, connections need only hand tightening.

- **Shut Off Position:** When the inlet handle points to the center of the bypass valve and the outlet handle points in the direction of flow, the water is shut off to the plumbing system. If water is available on the outlet side of the filter, it is an indication of water bypass around the filter (i.e. a plumbing connection somewhere in the building bypasses the filter). (Refer to Figure 6).

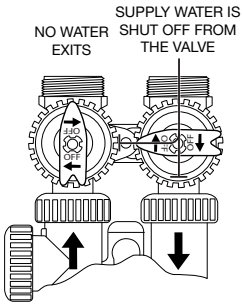

Figure 6: Shut Off Operation

Carbon Soak

Water will flow out of the inlet side of the bypass valve during this process. Be sure you perform these steps in a location suitable for water flow. Attach a garden hose to the outlet side of the bypass valve. Slowly fill the filter until water comes out the inlet side of the bypass valve. Shut the water off and allow the carbon to soak prior to installation.

Carbon Flush

Water will flow out of the inlet side of the bypass valve during this process. Be sure you perform these steps in a location suitable for water flow. With the garden hose still attached to the outlet side of the bypass valve, slowly flush with water for about 30 minutes until the water flowing out the inlet side of the bypass runs clear. After flushing is completed disconnect the garden hose and make sure the bypass is in the bypass position (Refer to Figure 4).

INSTALLATION REQUIREMENTS

Location Requirements

Indoor Location Requirements

IMPORTANT:

For indoor location of the Water Treatment System, make sure to follow these requirements:

- Install the appliance on flat and level surface.
- Make sure to maintain the space to access the equipment for maintenance.
- Ambient temperatures is more than 40 °F (1.4 °C) and below 110 °F (43.8 °C).
- Water pressure is less than 120 psi (8.6 bar) and more than 20 psi (1.38 bar).
- Total minimum pipe run to water heater of 10 ft. (3 m) to avoid the backup of hot water into system.
- Water line connections with shutoff or bypass valves.
- Must meet any local and state codes for site of installation.
- Valve is designed for minor plumbing misalignments. Do not support weight of system on the plumbing.
- Make sure that all the soldered pipes are fully cooled before attaching plastic valve to the plumbing.

Outdoor Location Requirements

IMPORTANT:

- A protected environment is recommended when the water system is installed outdoors. Ensure that important safety measures are taken for outdoor location as mentioned below:
  - **Direct Sunlight** - In direct sunlight the material will fade or discolor over time. The integrity of the material will not degrade to cause system failures.
  - **Temperature** - Extreme hot or cold temperature will cause damage to the valve. Freezing temperatures will freeze the water in the valve. This will cause physical damage to the internal parts as well as the plumbing and filtering media.

Mechanical Requirements

IMPORTANT:

- Do not support the weight of the filter on the control valve fittings, plumbing, or the bypass.
- Do not use pipe dope type sealants on threads.
- Teflon® tape may be used on connections where O-ring seal is not used.
- All plastic connections must be hand tightened.

  NOTE: Do not use pliers or pipe wrenches to tighten the plastic connections.
- Teflon® tape is not necessary on the nut connection or caps because of O-ring seals.
- Do not use petroleum based lubricants such as Vaseline, oils, or hydrocarbon based lubricants. Avoid any type of lubricants, including silicone, on the clear lip seals. Use only Dow #7 silicone lubricants (P/N 3FLP16174).
- Use appropriate grounding strap across the inlet and outlet piping of the water filter to ensure that a proper ground is maintained (see Figure 7).

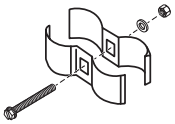

Figure 7

General Requirements

> Do not use with water that is microbiologically unsafe or of unknown quality without adequate disinfection before or after the system. Systems certified for cyst reduction may be used on disinfected waters that may contain filterable cysts.

IMPORTANT: The valve and tank components of this unit have been assembled and tightened to the proper factory torque specifications. Over tightening may result in improper valve and tank alignment or may damage the tank O-ring.

- Keep the media tank in the upright position. Do not turn upside down or drop. Turning the tank upside down or laying the tank on its side will cause media to enter the valve.
- Do not allow the filter to freeze. Damage from freezing will void this filter's warranty.
- Follow state and local regulations and codes for filter and installation.
- Operating water temperature: 40 °F - 110 °F (1.4 °C - 43.8 °C).
- Working water pressure range: 20 psi - 125 psi (1.38 bar - 8.62 bar).
- The filter is to be supplied only with cold water.
- When filling mineral tank with water, do not open water valve completely. Fill tank slowly to avoid media from exiting the tank.
- When installing the fitting package (INLET and OUTLET), connect to the plumbing system first and then attach the nut, split ring and o-ring. Heat from soldering or solvent cements may damage the nut, split ring or o-ring. Allow heated parts to cool and cemented parts to set before installing the nut, split ring and O-ring. Do not get primer or solvent on O-rings, nuts, or the valve.
- It is recommended that an authorized dealer service the filter and replace the carbon media on an annual basis.

†®TEFLON is a registered trademark of Chemours

INSTALLATION INSTRUCTION

- Install a ball valve and a boiler drain before and after the filter as shown in Figure 8 to use for testing the water before and after the filter.
- Facing the front of the filter connect the incoming water line to the inlet side of the bypass and connect the outlet side of the bypass valve to the treated water supply to the house.
- Once the INLET and OUTLET are securely connected to the plumbing supply. Open the INLET ball valve, Close the INLET boiler drain and Close the OUTLET ball valve with the bypass still in BYPASS OPERATION position.
  Open the OUTLET boiler drain and slowly turn on the water supply to the house and flush the lines into a bucket or garden hose to purge color, cement, sealants or solder residue.
- Once the lines are clear close the OUTLET boiler drain, check all new connections for leaks.
- Slowly open the bypass knob on the inlet side of the bypass valve and let the tank continue filling up with water. After the tank is full of water slowly open the bypass knob on the outlet side of the bypass valve.
  (Refer to Figure 3: NORMAL OPERATION).

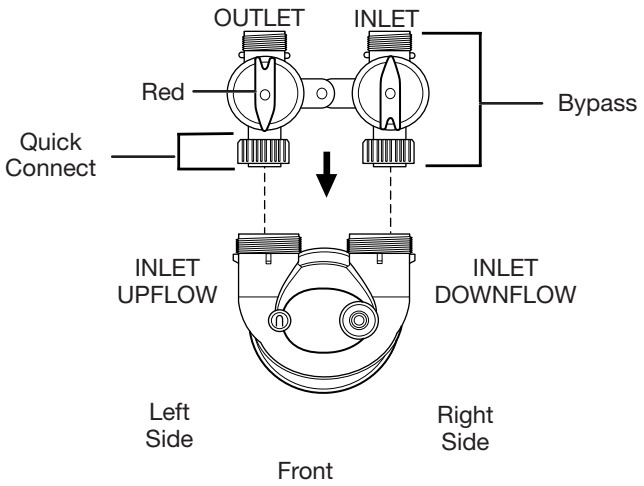

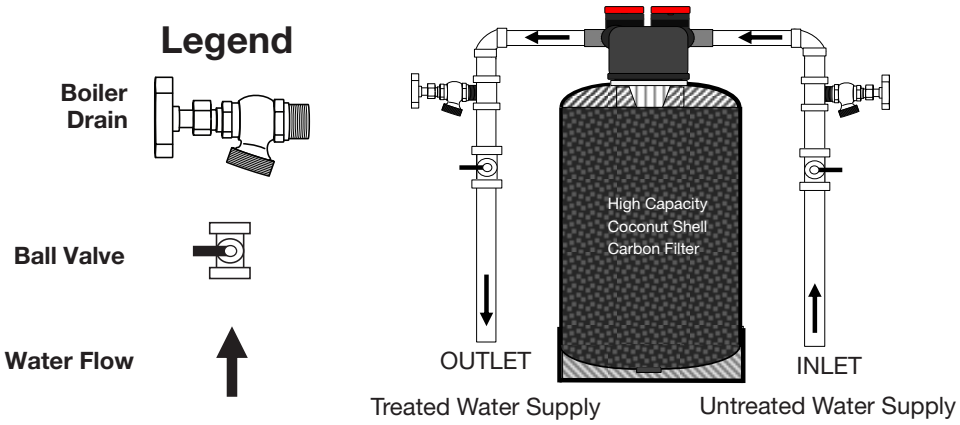

Figure 8

SYSTEM SPECIFICATIONS

MAYTAG™ 3M-PFC44-XXX Carbon Pre Filter

Model Numbers	3M-PFC44-XXX
Recharge Style	Down Flow
Service Connection Size	1" (2.54 cm) NPT
Typical Installation Space Requirements	10" W x 15" D x 50" H (25.4 cm W x 38 cm D x 127 cm H)
Shipping Weight	85 lbs

PLUMBING CONNECTION SELECTION

Includes: Bypass & Plumbing Connections	
XXX	
-100	BP, 1" (2.54 cm) PVC MNPT Elbow
-101	BP, 3/4" x 1" (1.9 x 2.54 cm) PVC Elbow Sol
-102	BP, 1" (2.54 cm) Brass Sweat LF
-103	BP, 3/4" (1.9 cm) Brass Sweat LF
-104	BP, 1" (2.54 cm) Plastic MNPT
-105	BP, 1¼"Plastic MNPT
-106	BP, 1¼" x 1½" (3.2 x 3.8 cm) PVC Sol
-107	BP, 3/4" (1.9 cm) SharkBite® LF
-108	BP, 1" (2.54 cm) SharkBite® LF
-109	BP, 3/4" (1.9 cm) John Guest® QC Elbow
-110	BP, 1" (2.54 cm) John Guest® QC
-111	1" (2.54 cm) PVC MNPT Elbow
-112	3/4" x 1" (1.9 x 2.54 cm) PVC Elbow Sol
-113	1" (2.54 cm) Brass Sweat LF
-114	3/4" (1.9 cm) Brass Sweat LF
-115	1" (2.54 cm) Plastic MNPT
-116	1¼" (3.2 cm) Plastic MNPT
-117	1¼" x 1½" (3.2 x 3.8 cm) PVC Sol
-118	3/4" (1.9 cm) SharkBite® LF
-119	1" (2.54 cm) SharkBite® LF
-120	3/4" (1.9 cm) John Guest® QC Elbow
-121	1" (2.54 cm) John Guest® QC

FILTER ASSEMBLY AND PARTS LIST

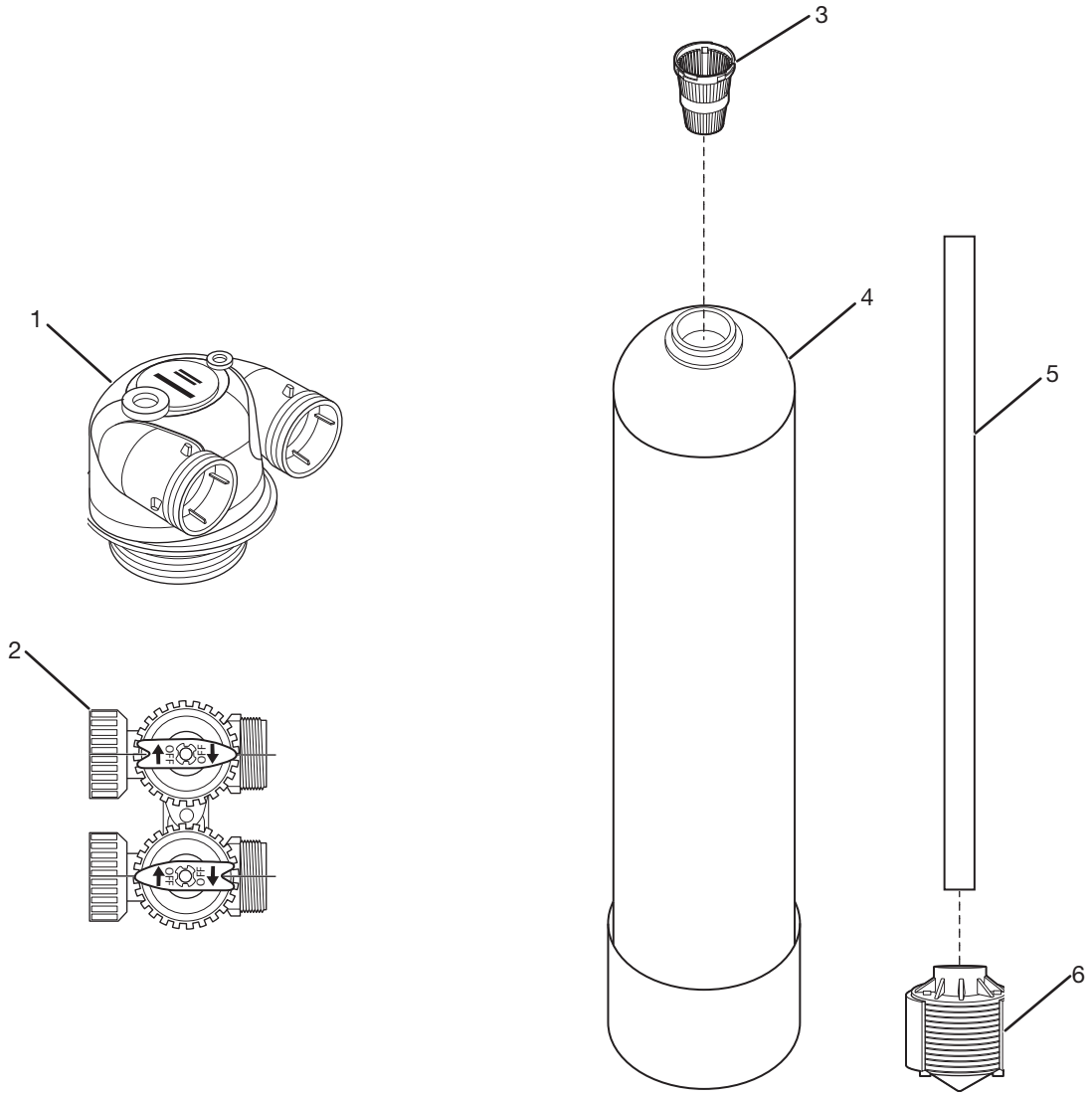

Figure 9

Drawing No.	Manufacture Part No.	Part No.	Description	Quantity
1	D1400	3INOUTCV D1220	I/O Cv 1.05" (2.67 cm)	1
2	V3006	3CVBYPASSV3006	Bypass Assembly	1
3	D1203	3TDD1203	Top Dist. ABS 1.05" (2.67 cm) Snap On	1
4		3MT1044PK12	10 x 44" (25.4 x 111.8 cm) Mineral Tank w/base	1
4**		3MT1054PK12	10 x 54" (25.4 x 137.2 cm) Mineral Tank w/base	1
5	D1130-12FT	3DISTMAT1.05	Dist Tube 1.05" (2.67 cm)	1
6	D1212-24	3DIST930HF1	Bottom Dist. ABS 1.05" (2.67 cm)	1
7*		3MNCARCOCONU830	Coconut Carbon 8 x 30" (20.3 x 76.2 cm)	1
8*		3MNGAR0812-5	Garnet #8-12	1

*** Not shown in drawing**

**** Additional Size**

Some images are enlarged for viewing purposes

BYPASS VALVE AND PARTS LIST

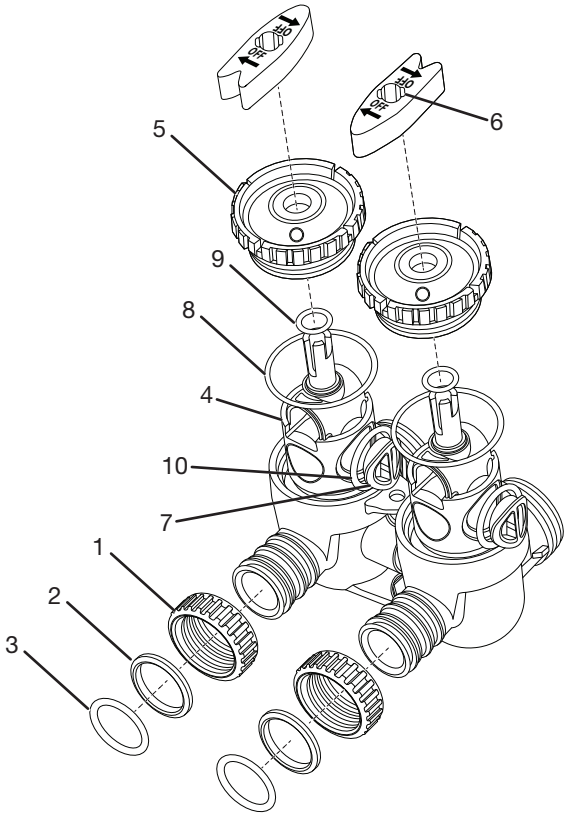

Figure 10

Drawing No.	Manufacture Part No.	Part No.	Description	Quantity
	V3006	3CVBYPASSV3006	Bypass Assembly	1
1	V3151	3CVBPFTG NUT1INV3151	Nut 1" (2.54 cm) Quick Connect (QC)	2
2	V3150	3CVBPFTG RINGV3150	Split Ring	2
3	V3105	3CVBPFTG ORINGV3105	O-Ring 215	2
4	V3145		Bypass 1" (2.54 cm) Rotor	2
5	V3146		Bypass Cap	2
6	V3147		Bypass Handle	2
7	V3148		Bypass Rotor Seal Retainer	2
8	V3152	3CVORINGINJBPV3152	O-Ring 135	2
9	V3155		O-Ring 112	2
10	V3156		O-Ring 214	2

BYPASS VALVE FITTINGS PACKAGES

Order No.: 3CVBPFTGV3007-01
Description: Fitting 3/4" x 1" (1.9 x 2.54 cm) PVC Solvent Elbow Assembly

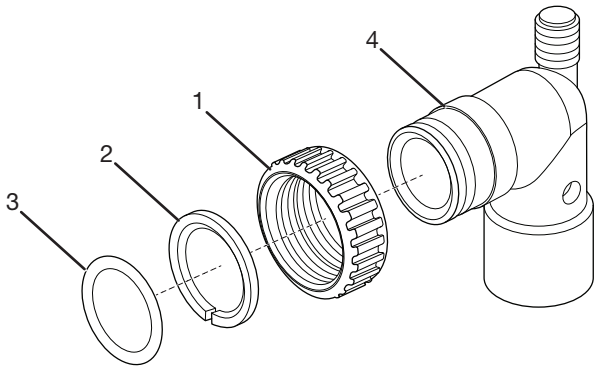

Figure 11

Drawing No.	Manufacture Part No.	Part No.	Description	Quantity
1	V3151	3CVBPFTG NUT1INV3151	Nut 1" (2.54 cm) QC	2
2	V3150	3CVBPFTG RINGV3150	Split Ring	2
3	V3105	3CVBPFTG ORINGV3105	O-Ring 215	2
4		3CVBPFTGV3007-01	3/4"x1"(1.9 x 2.54 cm) PVC 90°	2

Order No.: 3CVBPFTGV3007-15
Description: 3/4" (1.9 cm) John Guest® QC 90° Assembly

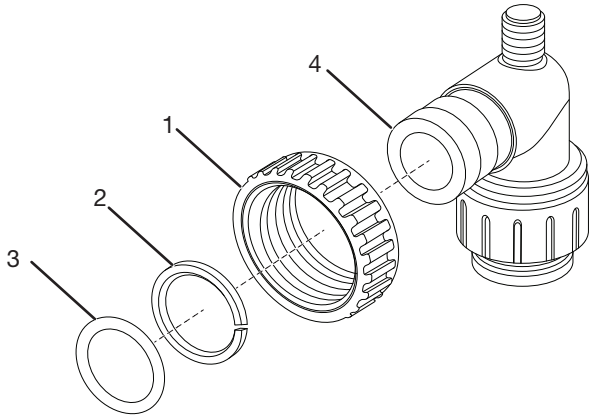

Figure 12

Drawing No.	Manufacture Part No.	Part No.	Description	Quantity
1	V3151	3CVBPFTG NUT1INV3151	Nut 1" (2.54 cm) QC	2
2	V3150	3CVBPFTG RINGV3150	Split Ring	2
3	V3105	3CVBPFTG ORINGV3105	O-Ring 215	2
4	V3790	3CVBPFTGV3007-15	3/4" (1.9 cm) John Guest® QC 90°	2

Order No.: 3CVBPFTGV3007-03
Description: Fitting 3/4" (1.9 cm) Brass Sweat Assembly LF

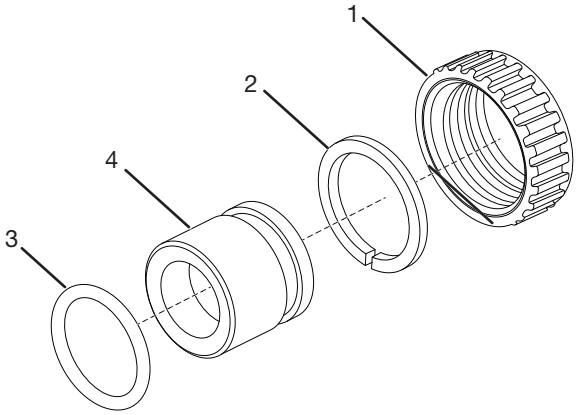

Figure 13

Drawing No.	Manufacture Part No.	Part No.	Description	Quantity
1	V3151	3CVBPFTG NUT1INV3151	Nut 1" (2.54 cm) QC	2
2	V3150	3CVBPFTG RINGV3150	Split Ring	2
3	V3105	3CVBPFTG ORINGV3105	O-Ring 215	2
4	V3188-01LF	3CVBPFTGV3007-03	3/4" (1.9 cm) Brass Sweat LF	2
Do not install in California				

Order No.: 3CVBPFTGV3007-02
Description: Fitting 1" (2.54 cm) Brass Sweat Assembly LF

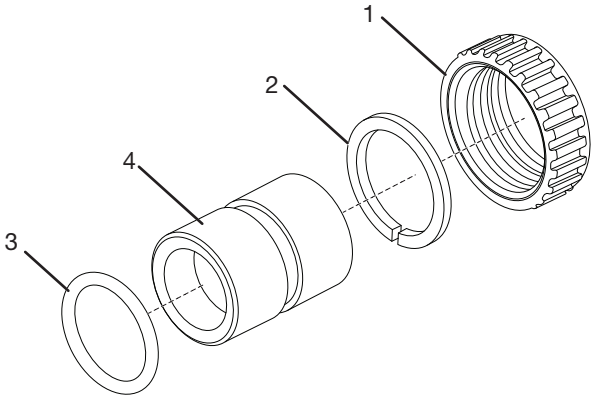

Figure 14

Drawing No.	Manufacture Part No.	Part No.	Description	Quantity
1	V3151	3CVBPFTG NUT1INV3151	Nut 1" (2.54 cm) QC	2
2	V3150	3CVBPFTG RINGV3150	Split Ring	2
3	V3105	3CVBPFTG ORINGV3105	O-Ring 215	2
4	V3188-LF	3CVBPFTGV3007-02	1" (2.54 cm) Brass Sweat LF	2
Do not install in California				

Order No.: 3CVBPFTGV007-04
Description: Fitting 1" (2.54 cm) Male MPT Assembly

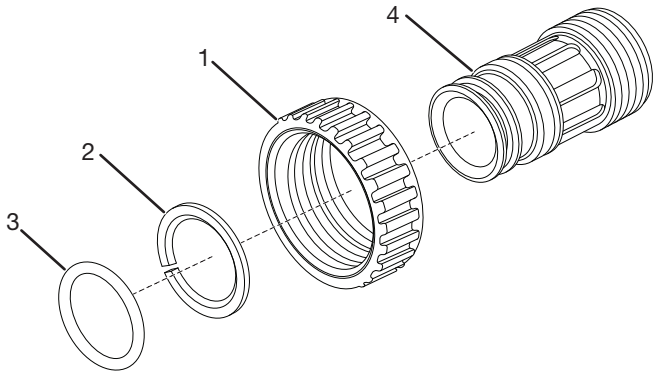

Figure 15

Drawing No.	Manufacture Part No.	Part No.	Description	Quantity
1	V3151	3CVBPFTG NUT1INV3151	Nut 1" (2.54 cm) QC	2
2	V3150	3CVBPFTG RINGV3150	Split Ring	2
3	V3105	3CVBPFTG ORINGV3105	O-Ring 215	2
4	V3164	3CVBPFTGV3007-04	1" (2.54 cm) Male MPT	2

Order No.: 3CVBPFTGV3007-12
Description: Fitting 3/4" (1.9 cm) Brass SharkBite® Assembly LF

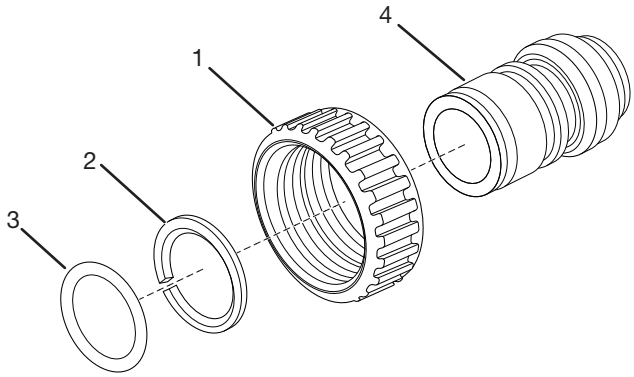

Figure 16

Drawing No.	Manufacture Part No.	Part No.	Description	Quantity
1	V3151	3CVBPFTG NUT1INV3151	Nut 1" (2.54 cm) QC	2
2	V3150	3CVBPFTG RINGV3150	Split Ring	2
3	V3105	3CVBPFTG ORINGV3105	O-Ring 215	2
4	V3628-LF	3CVBPFTGV3007-12	3/4" Brass SharkBite® Assembly LF	2

Order No.: 3CVBPFTG1.0V3007-13
Description: Fitting 1" (2.54 cm) Brass SharkBite® Assembly LF

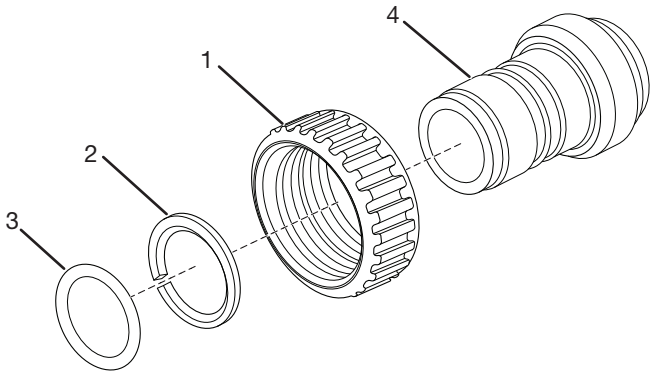

Figure 17

Drawing No.	Manufacture Part No	Part No.	Description	Quantity
1	V3151	3CVBPFTG NUT1INV3151	Nut 1" (2.54 cm) QC	2
2	V3150	3CVBPFTG RINGV3150	Split Ring	2
3	V3105	3CVBPFTG ORINGV3105	O-Ring 215	2
4	V3629-LF	3CVBPFTGV3007-13	1" (2.54 cm) Brass SharkBite® LF	2

Order No.: 3CVBPFTGV3191-01
Description: Fitting Bypass Vertical Adapter Assembly

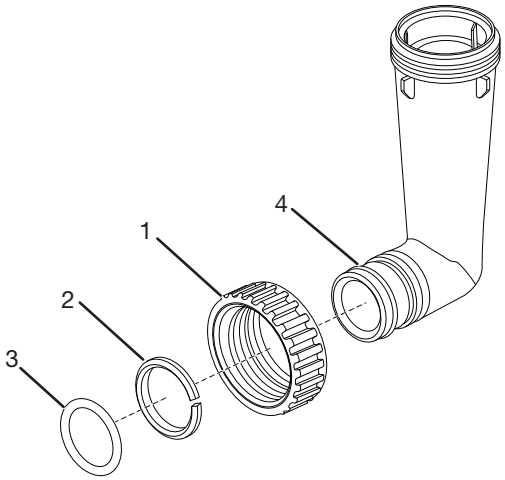

Figure 18

Drawing No.	Manufacture Part No.	Part No.	Description	Quantity
1	V3151	3CVBPFTG NUT1INV3151	Nut 1" (2.54 cm) QC	2
2	V3150	3CVBPFTG RINGV3150	Split Ring	2
3	V3105	3CVBPFTG ORINGV3105	O-Ring 215	2
4	V3191	3CVBPFTGV3191-01	Bypass Vertical Adapter	2

Order No.: 3CVBPFTGV3007-17
Description: Fitting 1" (2.54 cm) John Guest® QC Assembly

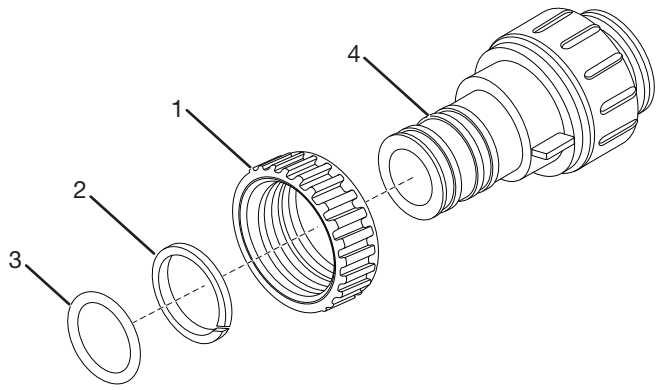

Figure 19

Drawing No.	Manufacture Part No.	Part No.	Description	Quantity
1	V3151	3CVBPFTG NUT1INV3151	Nut 1" QC	2
2	V3150	3CVBPFTG RINGV3150	Split Ring	2
3	V3105	3CVBPFTG ORINGV3105	O-Ring 215	2
4	V4045	3CVBPFTGV3007-17	1" (2.54 cm) John Guest® QC ASY	2

Order No.: 3CVBPFTGV3007-00
Description: Fitting 1" (2.54 cm) PVC Male NPT Elbow Assembly

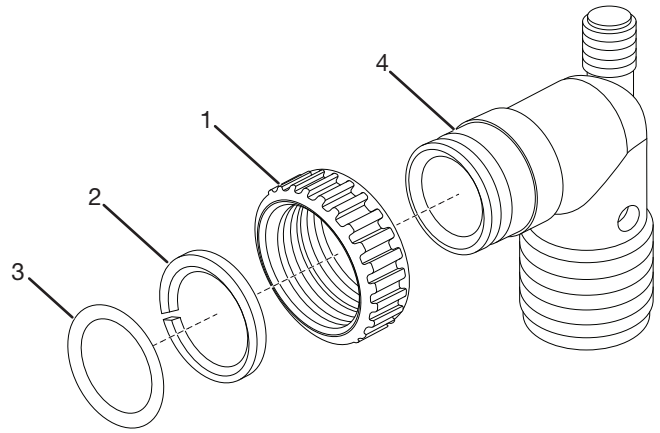

Figure 20

Drawing No.	Manufacture Part No.	Part No.	Description	Quantity
1	V3151	3CVBPFTG NUT1INV3151	Nut 1" (2.54 cm) QC	2
2	V3150	3CVBPFTG RINGV3150	Split Ring	2
3	V3105	3CVBPFTG ORINGV3105	O-Ring 215	2
4	V3149	3CVBPFTGV3007-00	1" (2.54 cm) PVC Male NPT Elbow	2

PERFORMANCE DATA SHEET

MAYTAG™ 3M-PFC44-XXX Carbon Pre Filter

Model Numbers	3M-PFC44-XXX
Rated flow rate	12.0 gpm
Pressure drop @ rated flow rate	@ 15.0 psi
Peak Flow Rate	15.0 gpm
Pressure Drop @ Peak Flow Rate	@ 25 psi
Type and amount of Carbon	Acid Washed Coconut Shell Carbon 0.50 ft^3
Media Tank Size	10" x 44" (25.4 cm x 111.8 cm)
Working Water Pressure Range	20 to 120 psi (1.4 to 8.4 kg/cm^2)
Operating Water Temperature	40 to 110 °F (1.4 to 43.3 ° C)
Service Connection Size	1" (2.54 cm) NPT
Typical Installation Space Requirements	10" W x 15" D x 50" H (25.4 cm x 38 cm x 127 cm)
Shipping Weight	85 lbs

Do not use with water that is microbiologically unsafe or of unknown quality without adequate disinfection before or after the system. Systems certified for cyst reduction may be used on disinfected waters that may contain filterable cysts.

This system confirms to NSF/ANSI Standard 42 for the specific performance claims as verified and substantiated by test data.

NSF/ANSI 42 Performance Claims - Chlorine, Taste and Odor;
NSF/ANSI 61 Drinking Water System Components - Health Effects;
NSF/ANSI 372 Lead Free Compliance; UPC Uniform Plumbing Code; and IPC International Plumbing Code.

NSF/ANSI 42: Reduction claim: Aesthetic Chlorine/Taste and Odor up to 197,389 gallons @ 12.0 gpm and rated service flow with pressure drop @ 15.0 psi

Certified by
IAPMO R&T
NSF/ANSI 42 & 372 · IPC

The concentration of the indicated substances in water entering the filter was reduced to a concentration less than or equal to the permissible limit.

Substance	Influent Challenge Concentration	Reduction Requirement	Average% Reduction
Chlorine	2.0 mg/L ± 10%	>50%	89.9%

NOTES

NOTES

MAYTAG™ CARBON PRE FILTER 3M-PFC44-XXX

WHAT'S INSIDE MATTERS™

LIFETIME LIMITED WARRANTY

The LeverEdge (hereinafter LE) warrants any MAYTAG™ brand water treatment system manufactured by LE and installed by a duly authorized Maytag dealer, to be free from defects in materials and workmanship to the original residential purchaser (hereinafter CONSUMER) from the date of purchase. All aspects of this warranty are subject to the following limitations, terms and conditions.

1. DURATION OF WARRANTY

If LE Equipment consisting of the Mineral and Storage Tanks, Controls and Valves, Pumps and Switches, Ion Exchange Resin and Treatment Media, Drinking Water Systems (excluding replacement exchange modules or inline filters) and Ultraviolet Lights (excluding bulbs and sleeves) is determined to have failed as a result of a manufacturing defect, LE will, at its sole discretion, repair or replace the defective part at NO CHARGE to the CONSUMER (excluding labor, and applicable shipping and handling costs) for the duration of the Consumer's ownership of the original equipment (hereinafter “LIFETIME”).

2. LIMITATIONS OF COVERAGE

This warranty extends only to the CONSUMER for damage resulting from defects in materials and workmanship, and does not include renewable components. It does not extend to damage caused by the CONSUMER’S neglect or abuse, or by accident, to damage caused by wind, hail or abnormal weather conditions, or to damage caused by acts of God, civil insurrection or extraordinary circumstances beyond the control of LE.

LE shall not be liable for any direct or indirect damage resulting from the use of the Equipment, and in no event shall the extent of this Warranty coverage exceed the purchase price of the Equipment.

LE cannot know the characteristics of a CONSUMER’S water supply or the purpose for which one is purchasing MAYTAG™ Equipment. Also, water qualities vary seasonally and over time. Therefore, LE assumes no liability for the determination of the proper equipment necessary to meet a CONSUMER’S requirements, nor does it authorize others to assume such obligations on its behalf.

This warranty excludes any Equipment which was not manufactured by LE and installed by an authorized Maytag dealer or on which the date code has been removed or altered. Any tampering or attempted repair performed by anyone other than an authorized dealer, including the CONSUMER, voids this Warranty.

3. MISCELLANEOUS

In order to be considered for validation, all claims for Warranty coverage must be accompanied by a copy of the purchase agreement indicating the date of initial installation, and a copy of the CONSUMER’s current utility bill. LE reserves the right to inspect the MAYTAG™ Equipment prior to honoring any warranty claim.

This warranty is only issued by LE, and the CONSUMER is hereby advised that Maytag is not the manufacturer of the equipment, and provides no additional or separate warranty whatsoever in connection with the equipment.

This warranty gives you specific legal rights, and you may have other rights which may vary from state to state. Any and all inquiries or claims under this Warranty must be submitted in writing to The LeverEdge, Attn: Warranty Department, 1423 Gunn Highway, Odessa, FL 33556.

THE LEVEREDGE
1423 Gunn Highway
Odessa, FL 33556
Phone: (866) 910-8351
www.theleveredge.com

Limited warranty provided by the manufacturer.
1423 Gunn Highway Odessa, FL 33556
Phone: (866) 910-8351 I maytagwater.com